LED Track Light B2 28W (Samsung)

B2 LED luminaire is an option for customers who are looking for alternatives of 30W metal halide luminaires mounted on the 3-phase lighting tracks. The solution is a functional replacement which delivers the equivalent amount of light at a significantly reduced demand for electricity. Heart of the fixture, is the LED COB module made by Samsung.

Fixture is available in many variants - resulting from a combination of parameters.

Dimensions:

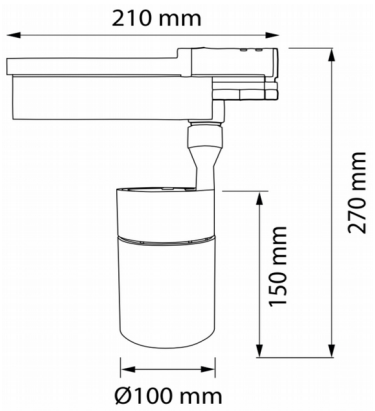

SAMSUNG OSRAM

Code:	CCT/CRI:	Φ Fixture/LED:	Housing:
492-140-7**x**900S	4000K/90	2580/3555lm	white
492-940-7**x**900S	4000K/90	2580/3555lm	black
492-135-7**x**900S	3500K/90	2525/3485lm	white
492-935-7**x**900S	3500K/90	2525/3485lm	black
492-130-7**x**900S	3000K/90	2450/3385lm	white
492-930-7**x**900S	3000K/90	2450/3385lm	black

***x (beam angle)** 2-24°, 3-38° (eg. 492-140-7**3**900S = 38°)

Parameters:
power factor (PF): >0,95
power LED/fixture: 25W/28W
voltage: 230V AC (via 3-phase track)
beam angle: 24° or 38°
light source: COB LED Samsung (LC026D2)
lifespan L80/B10/C10: 25.000 hours (according to IEC 62717 norm)
CRI: CRI>90
compatible with track lights: GLOBAL trac, Unipro, etc.

Additional picture:

Dimensions:
diameter: fi 100mm
length: 150mm
height: 270mm

Material:
aluminium housing + PCV

IP20 | 230V AC | RoHS | CE | Up to 3 yrs warranty